ETRIKO

electric mobility

(L3 model)

Rapido

CATALOGUE

User Instructions 2

Description of Components and Parts 3

Operation Guide 6

Checks before Riding 11

Battery Use Instructions 13

Maintenance 16

User instructions

To our valuable consumers

Thank you very much for choosing our SKG s.p.a. e-scooter

This manual focuses on the basic performance, adjustment methods, safe driving instructions and maintenance information of electric scooters. For your own safety and more enjoyable riding experience, please carefully read the contents of this manual before riding the electric scooters. Your riding safety depends not only on your personal alertness and your driving proficiency, but also depends on the mechanical performance of the electric scooters. It is essential that you check and perform maintenance for the electric scooter before riding every single time.

This electric scooter will be your ideal transportation tool as long as you check in advance, master the safe driving method and obey the traffic rules. Due to the continuous improvement of this product, the relevant data and structure of this manual are subject to change without further notice.

Kind reminder：

Please do not use the electric scooter without carefully reading the instructions and understanding the function of electric vehicle. Please do not lend it to people who do not know how to operate and ride the electric vehicle.

Please do not discard the waste battery at will to avoid polluting the environment. The waste battery of our product shall be recycled by our company, our dealers or outlets.

Information of Elements

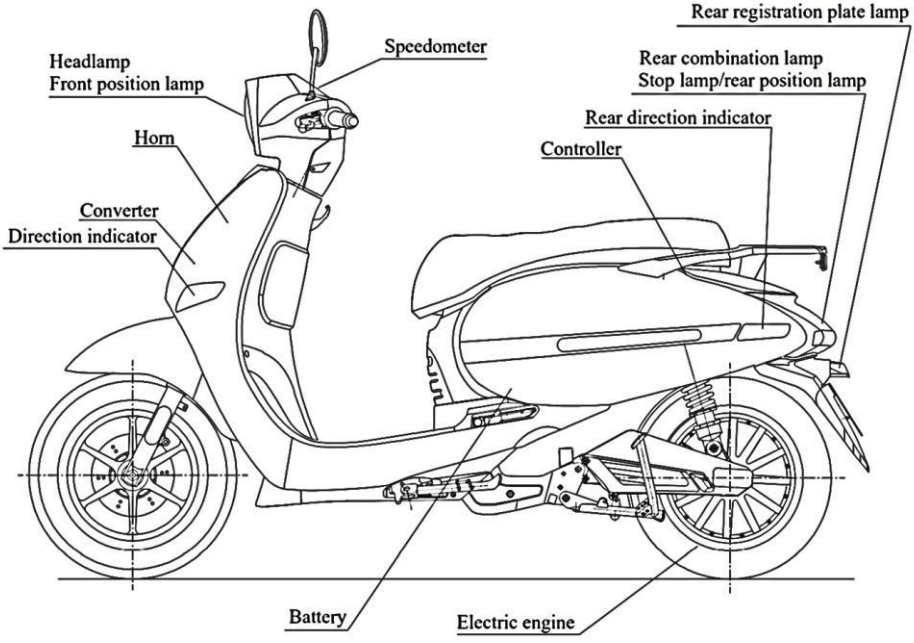

DESCRIPTION OF COMPONENTS & PARTS

Diagram of Instrument Panel

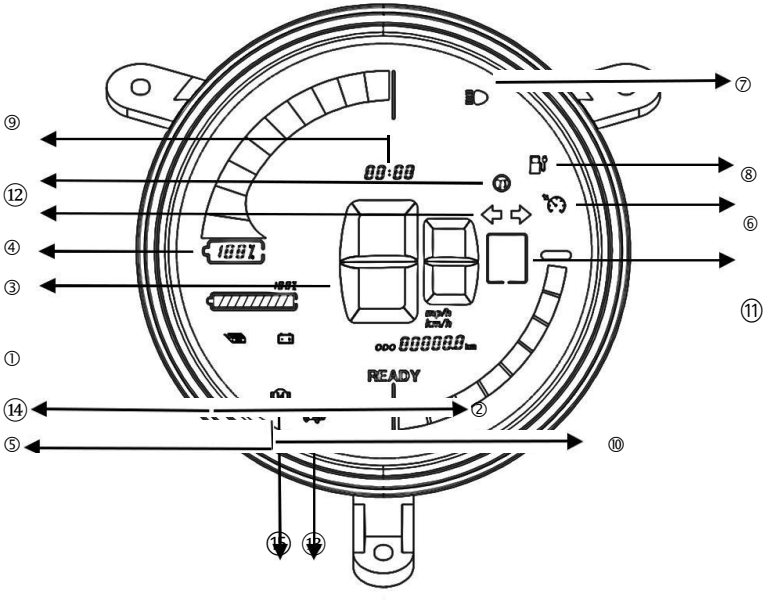

① **Speed Display** - Display current speed.

② **ODO** - Total ODO (Odograph) Distance.

③ **Power Display Bar** - Display current battery level.

④ **Left Winker Indicator** - Flashing in synchronization.

⑤ **The Charge Indicating Lamp of Battery** - Light up when battery's low capacity.

⑥ **Cruise Control** – Light up when the Cruise control is on.

⑦ **High Beam** - Light up when the high beam is on.

⑧ **The Charge Indicating Lamp of Battery** - Light up when battery's low capacity.

⑨ **Riding Time Display –** Display current riding duration time.

⑩ **READY Light** - Ready for driving.

⑪ **Riding Mode** - The current riding mode.

⑫ **Electronic Side Stand** - Light up when the electric side stand is put down.

⑬ **Speed Accelerator Failure Warning.**

⑭ **Controller Failure Warning.**

⑮ **Motor Failure Warning**

OPERATION GUIDE

How to Operate the Smart Remote Control

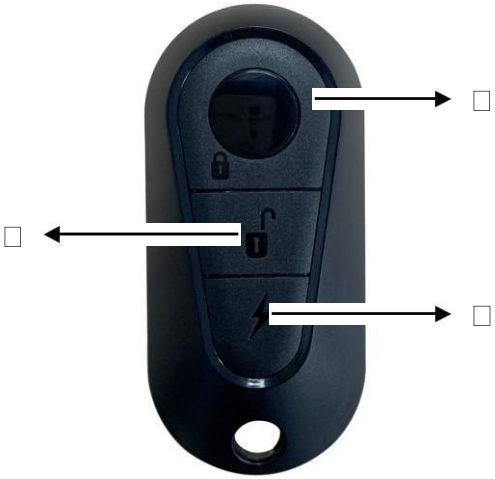

With the advanced Smart Remote Controller, you can easily lock or unlock your electric scooter by simply pressing the button within 5 meters.

① **Unlock** - Press the unlock button, and the start button stays on. The scooter enters into the [Unlocked State].

② **Lock** - When the scooter is in the [Static State], press the lock button, and the start button flashes. The scooter enters the [Locked State].

③ **Remote Keyless Entry** - After unlocking the scooter, press this button twice within two(2) seconds, and the scooter will be in the "Powered" state without key.

Left Start Button

① **High/Low Beam Switch** - Press to turn on the high beam. Press to turn on the low beam.

② **Winker Button** - Dial to to turn on the Left winker. Dial to to turn on the Right winker.

Press the middle button to turn off the winker.

③ **Horn Button** - Press to make a sound and release to stop.

④ **Fingerprint Lock** - Press to turn on the scooter.

Right Start Button

① **Gear Shift Switch** - The scooter has 3 gear shifts, 1 "Eco" (25km/h), 2 "Cruise" (35km/h), and 3 "Sport" (45km/h).

② **Lamp Switch** - Dial to turn on the display lamp. Dial to make headlamp lighter. The headlamp will turn on automatically while the scooter switch is on if the on status. Dial to keep the headlamp on darkest status.

③ **Parking Switch** - Long press Ⓟ to switch parking mode.

④ **Cruise Control Button** - When driving the scooter and pressing this button, it will

keep driving at the last speed without turning the handle until taking the break.

⑤ **Warning Switch -** Dial ⚠ to turn on the warning lights (left and right direction lights shining together).

Guide of Ignition Key

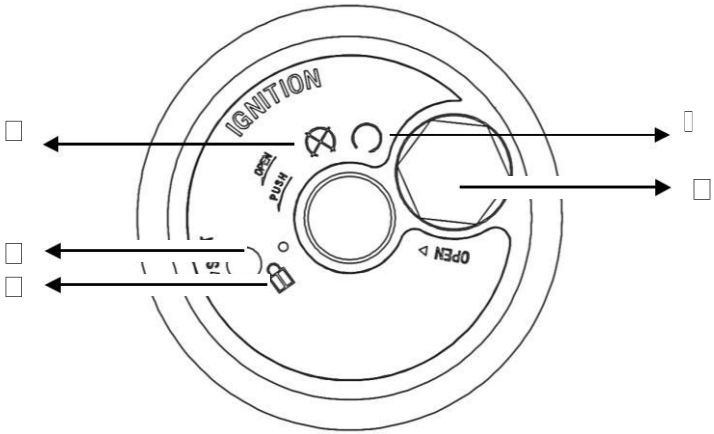

① After the scooter stops, turn the handlebar to the far left, insert the key into the physical handlebar lock, push and rotate it leftwards to lock the scooter. Insert the key into the physical handlebar lock, and rotate it rightwards to unlock the scooter.

② Insert the key and rotate it rightwards, unlock the handlebar.

③ Insert the key and rotate it rightwards, to start the scooter for driving.

④ Insert the end of the key handle, turn left to close the cover of the key hole.

⑤ Press it to open the cover of the key hole.

Operation of Air Switch/ Battery Connection

As the protection switch for the main power of electric scooter, the air switch will automatically disconnect to ensure safety when the scooter circuit is abnormal or the current caused by short circuit exceeds the set safe value.

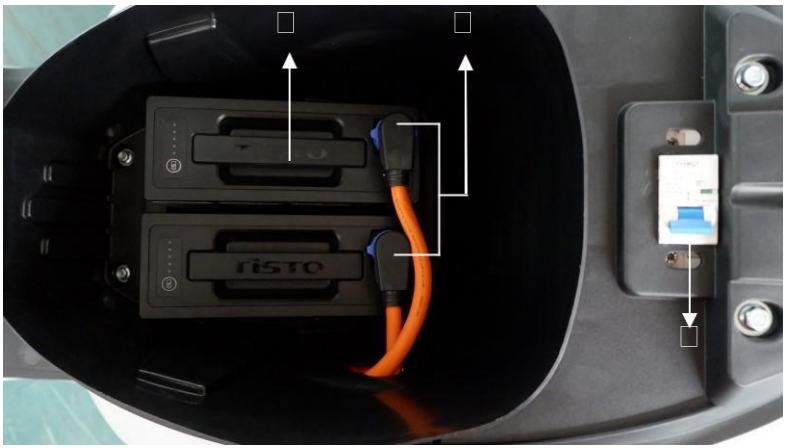

① Plug both battery cables inside sockets, connecting the batteries with scooter.

② Air switch ON/OFF: Before starting the scooter, please turn ON this Air switch in advance. (Notes: In order to protect your safety, please turn off the air switch when cleaning, storing the scooter for a long time, or re- moving the battery pack.) Connect the battery with scooter.

③ Unlock and Remove the battery case: Unplug the power cable, then pull up the battery case with one hand.

How to Use the USB Interface

① Turn on the scooter.

② Open the toolbox of the scooter.

③ Open the small cap of the USB Interface.

④ Connect your device. Then you can enjoy the driving while charging your device.

CHECKS BEFORE RIDING

Make sure to check the following items before riding an Electric Scooter,

which will guarantee your safety on the road.

① Whether the handlebar is stable and flexible when turning.

② Whether the switches on the right and left handlebars can work normally.

③ Whether the speed accelerator can work normally. Make sure the tire pressure is normal. The suggested tire pressure is 225-250kPa for front tire and 225-250kPa for rear tire.

④ Check tire surface for cracks, damage, wear, and foreign matter puncture or attachment

⑤ Whether the tread depth is sufficient (>0.8 mm).

⑥ Whether the battery is fully charged.

⑦ Whether the head and tail lights, brake lights and winkers can work normally.

⑧ Whether the horn can work normally.

⑨ Whether the rear mirrors are clean. Adjust them to the appropriate angle.

⑩ Whether the brake oil is sufficient, and whether the handlebars and brake system can work normally.

⑪ For any abnormality or operational concern, please contact local Customer Service Center.

CHECKS BEFORE RIDING

Make sure to check the following items before riding an Electric Scooter, which

will guarantee your safety on the road.

① Insert the key and turn leftwards, open the saddle, and turn on the Air switch.

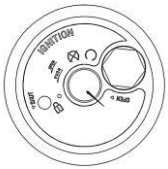

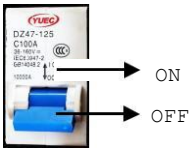

② Put on the helmet, and retract the electronic side stand.

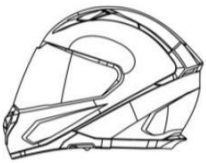

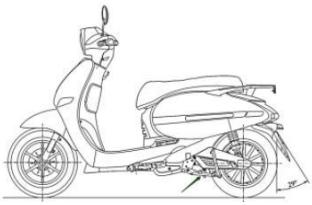

③ Insert the key and turn rightwards, the Instrument is turned on, and the Display light is ON, scooter is ready for driving now.

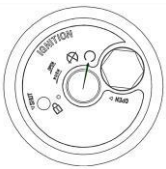

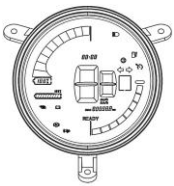

④ Long press the Parking Switch (P) ,then you can start driving. Gently turn the handlebar to ride on the road.

TIPS:

Before riding, make sure the electronic side stand retracted and rotate the handlebar to ensure that the

handlebar lock is closed. If the Parking Switch is long pressed when riding, the bike will be dis-energized.

So DO NOT press it when riding for avoiding danger caused by the sudden loss of power.

If the electronic side stand is extended when riding, the bike will be dis-energized. So DO NOT extend the electronic side stand when riding for avoiding danger caused by the sudden loss of power.

The scooter must be fully stopped before starting. In case of abnormality during riding, please ride carefully or push it to a safe place. DO NOT try restarting the bike during riding or on the lane so as to avoid danger.

BATTERY USE INSTRUCTIONS

How to Charge the Battery

① **Insert the main charger plug into the charging port of the scooter.**

Insert the chargers AC power plug into the home power socket, and the battery starts charging when the charger indicator turns red. The battery is fully charged if the charger indicator turns from red to green.

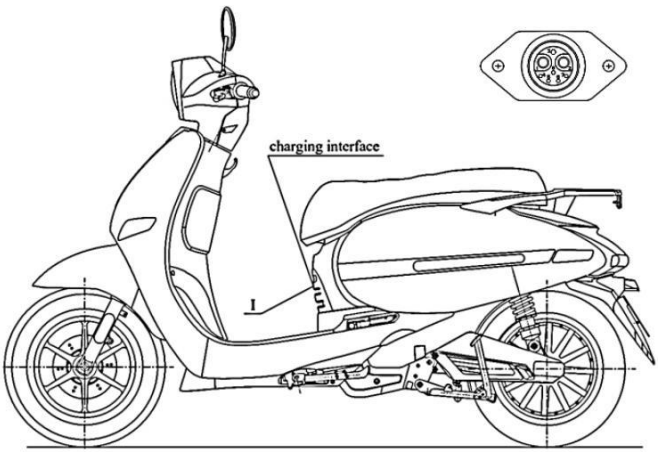

a. Output of charger *– Connect with charging socket on the scooter or the battery's charging socket.*

b. Input of charger plug *– Connect with home power socket on the wall.*

c. Status lamp *– Red lamp blinking when charging. Green lamp after full charged.*

Please unplug the power cable and battery output cable after full charged.

BATTERY USE INSTRUCTIONS

How to Charge the Battery

② **Pull up the battery from scooter, Insert the main charger plug into the charging socket of the battery. Insert the charger's AC power plug into the home power socket, and the battery starts charging when the charger indicator turns red. The battery is fully charged if the charger indicator turns from red to green.**

TIPS:

Short circuit of the cathode and the anode at the battery's input.
Keep it away from children, fire and heat source. It is strictly forbidden to throw it into the fire;
Violent movements, shock and extrusion are prohibited;
Only the specified charger can be used, and other chargers are prohibited to charge the battery;
This product has been subject to strict inspection before leaving factory, and it is strictly prohibited to dismantle it. Please contact our company's after-sales department for any question.

TIPS:

Do not expose the battery to water and prevent it from being damped by water or rained.
Charge temperature: 0-45 °C, discharge temperature: -20-45 °C;
Battery capacity will be reduced when placed in a low-temperature environment; Charge the battery when you use it, but make sure to charge it before the capacity is lower than 20%.
When it is not used for a long time, please remove it from the scooter.

BATTERY USE INSTRUCTIONS

Storage, Maintenance and Transportation

Please charge the battery to half-saturation state when storing or transporting it (after the battery is discharged, charge it for 3 hours). Place it in a dry and ventilated place;

Battery and charger should be kept in a clean, dry, and ventilated place. Keep them away from corrosive materials, power source and heat source;
Storage conditions: ambient temperature -20-35 °C, humidity < 65% RH; When storing the charger, please disconnect it from the battery.

Regular maintenance can enhance the service life and driving safety of the electric scooter.
Please refer to the following suggestions and take care of your scooter.

Routine Cleaning and Maintenance

Cleaning: Please use clean water and neutral detergent to clean it, and use soft cloths and sponges to clean the surface;

It is prohibited to use metal brushes, sandpaper or the like to clean it, in order not to scratch the parts surface. After cleaning, dry it with soft cloths.

TIPS:

Please disconnect the air switch before cleaning.

Do not use strong water jet to directly wash it, so as to avoid the default of mechanical parts

caused by water invasion.

Storage: Try to park it in a dry and cool room to reduce the exposure to sun and rain and avoid the reduction of service life due to corrosion of parts.

When left unused for a long time, please turn off the air switch and disconnect the power supply circuit to prevent over discharging.

After long-term storage, please fully charge it before use.

Regular Inspection and Maintenance

The new scooter must be subject to the first inspection and maintenance in the Service Center when it reaches 1,000 km or two months (whichever comes first).

The scooter is recommended to be subject to regular inspection and maintenance in the Service Center at every 3,000 km or six months (whichever comes first).

TIPS:

Please disconnect the air switch before cleaning.

Do not use strong water jet to directly wash it, so as to avoid the fault of mechanical parts caused by being damped.

MAINTENANCE

Regular maintenance can improve the service life and driving.

Please refer to the following suggestions and take care of your scooter.

Failure	Causes	Solutions
The scooter has no electricity, and the READY lamp does not shine.	☐ Battery is poorly connected. ☐ Air switch is not turned on.	☐ Connect the battery properly at its main plug. ☐ Turn on the air switch.
When turning the speed regulating steering handle-bar, the motor does not turn after being powered,	☐ Low battery volume. ☐ Side stand is not retracted. ☐ Brake handle does not reach the right position. ☐ Steering handlebar failure. ☐ The controller plug is loose. ☐ Controller failure.	☐ Charge the battery. ☐ Put away the side stand. ☐ Close the parking key. ☐ Place the brake handle at the right position. ☐ Change handlebar. ☐ Re-plug controller. ☐ Change controller.
Speed is slow or mileage is short.	☐ Low battery. ☐ Under-inflated tire. ☐ Heavily overloaded. ☐ Brake pads interference. ☐ Battery aging or normal scrap.	☐ Charge the battery. ☐ Inflate the tire and check the tire pressure before riding. ☐ Foster a good habit, and keep the appropriate load Change the brake pads and check the brake system before riding. ☐ Change battery. ☐ Check whether the main plug is in a

		right place Use the special charger.
Battery can not be charged.	□ Poor contact of the main plug of the charger. □ Do not use the wrong charger. □ Battery aging or normal scrap. □ Battery low-voltage protection.	□ Contact of the main plug again. □ Contact with local service office of battery.

RAPIDO 6.0

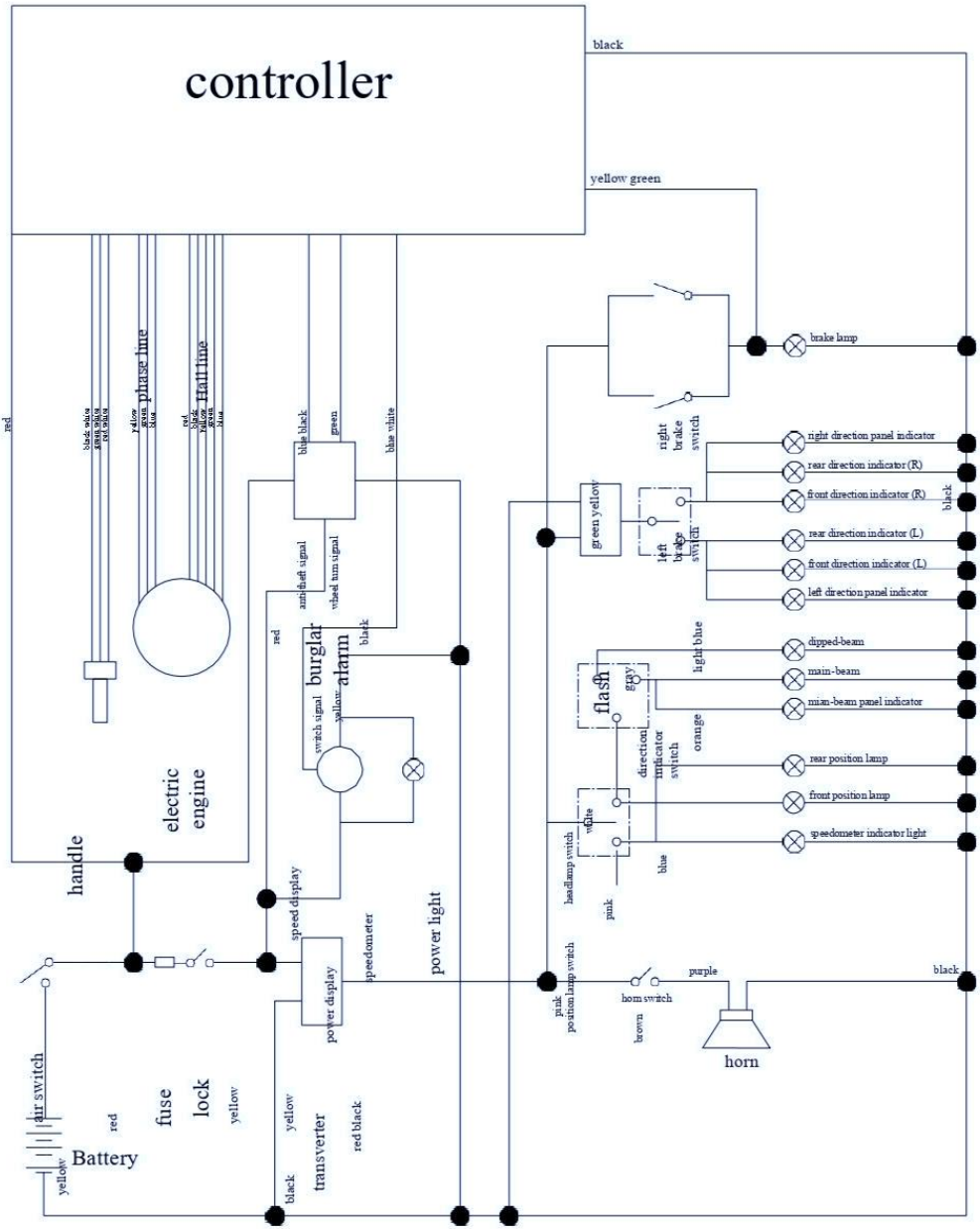
controller
black
yellow green
red
black white
white black
red white
phase line
yellow green
blue
red black
yellow green
blue
hall line
blue black
green
blue white
handle
electric engine
burglar alarm
red
black
yellow
switch signal
amb left signal
wheel turn signal
speed display
power display
speedometer
power light
air switch
Battery
fuse
lock
transverter
red
yellow
red black
black
brake lamp
right brake switch
left brake switch
green yellow
right direction panel indicator
rear direction indicator (R)
front direction indicator (R)
rear direction indicator (L)
front direction indicator (L)
left direction panel indicator
dipped-beam
main-beam
main-beam panel indicator
light blue
flash
gray
direction indicator switch
orange
rear position lamp
front position lamp
speedometer indicator light
headlamp switch
white
pink
blue
pink position lamp switch
horn switch
brown
purple
horn
black